MACAP®

Model
M2D

Evol.	Table	Date
1	1/2	01/01/2012

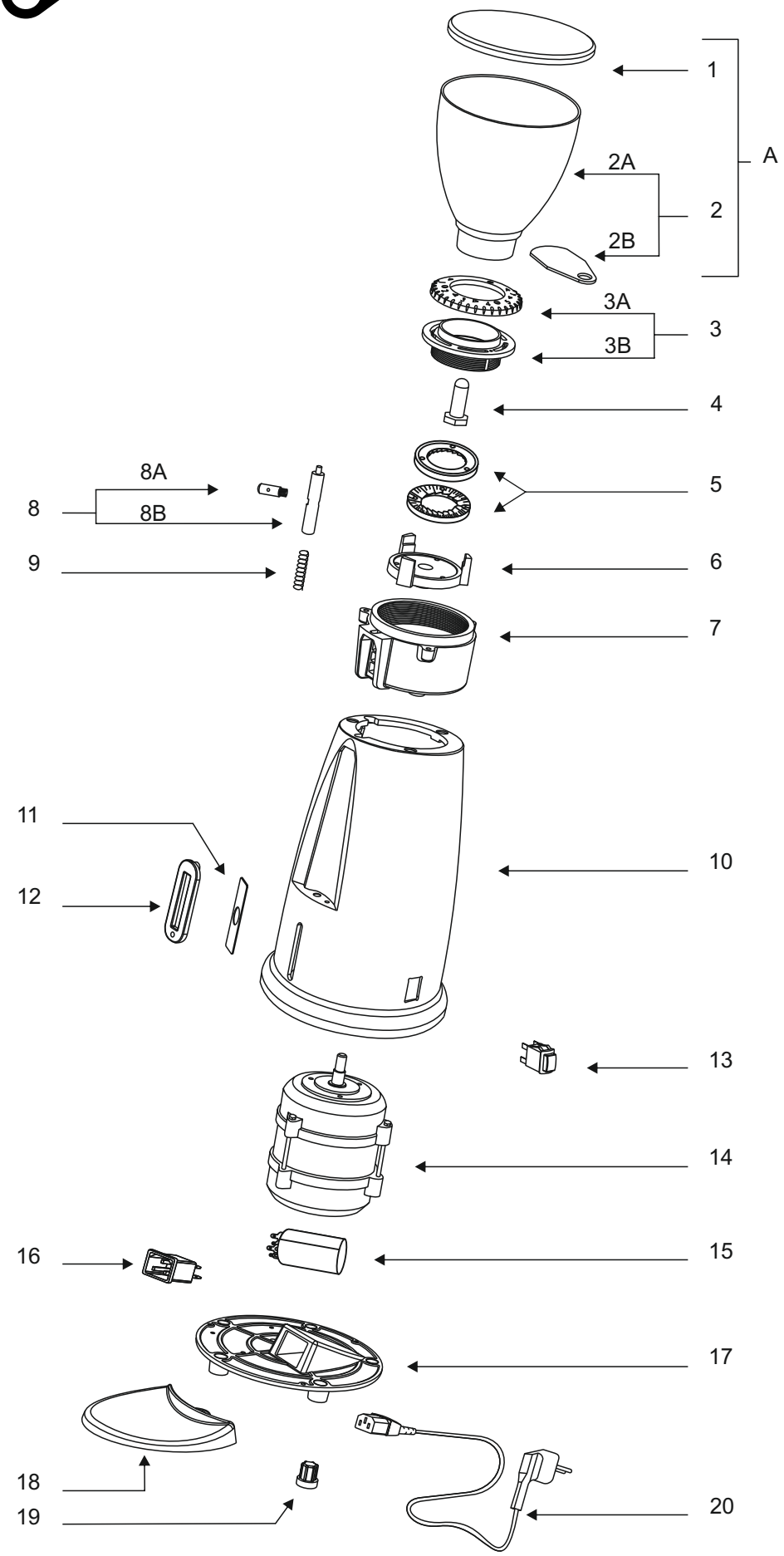

	N.	Code	Features
	A	C2470011	
	1	C247001	
	2	C247002	
	2A	C247002A	
	2B	C247003	
	3	C2420041	
	3A	C247005	
	3B	C242004	
	4	C244047	
	5	C244006	
	6	C242007	
	7	C241010	
	8	C244060	
	8A	C244046	
	8B	C244045	
	9	C248044	
	10	C241012C10	Light grey
		C241012C18	Black
		C241012C83	Chrome
	11	C244058	
	12	C247023	
	13	C246015	
	14	C246011	230V-50/60Hz
		C246011B	110V-60Hz
	15	C00061107	230V-50/60Hz
		C246060	110V-60Hz
	16	C246050	
	17	C247013	
	18	C247016	
	19	C247049	
	20	C246051	SHUKO
		C2460511	USA
		C2460212	UK
		C2460513	AUSTRALIA
		C2460514	SWITZERLAND

Descriptions	
	Available
	Not available

MACAP srl
Via Toniolo 18 - 30030 - Maerne - (VE) - Italy - Tel. +39 041 5030466 Fax +39 041 5030477
www.macap.it - www.dynamometrictamper.com - info@macap.it

Model
M2D

Evol.	Table	Date
1	2/2	01/01/2012

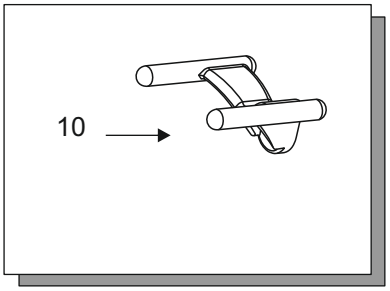

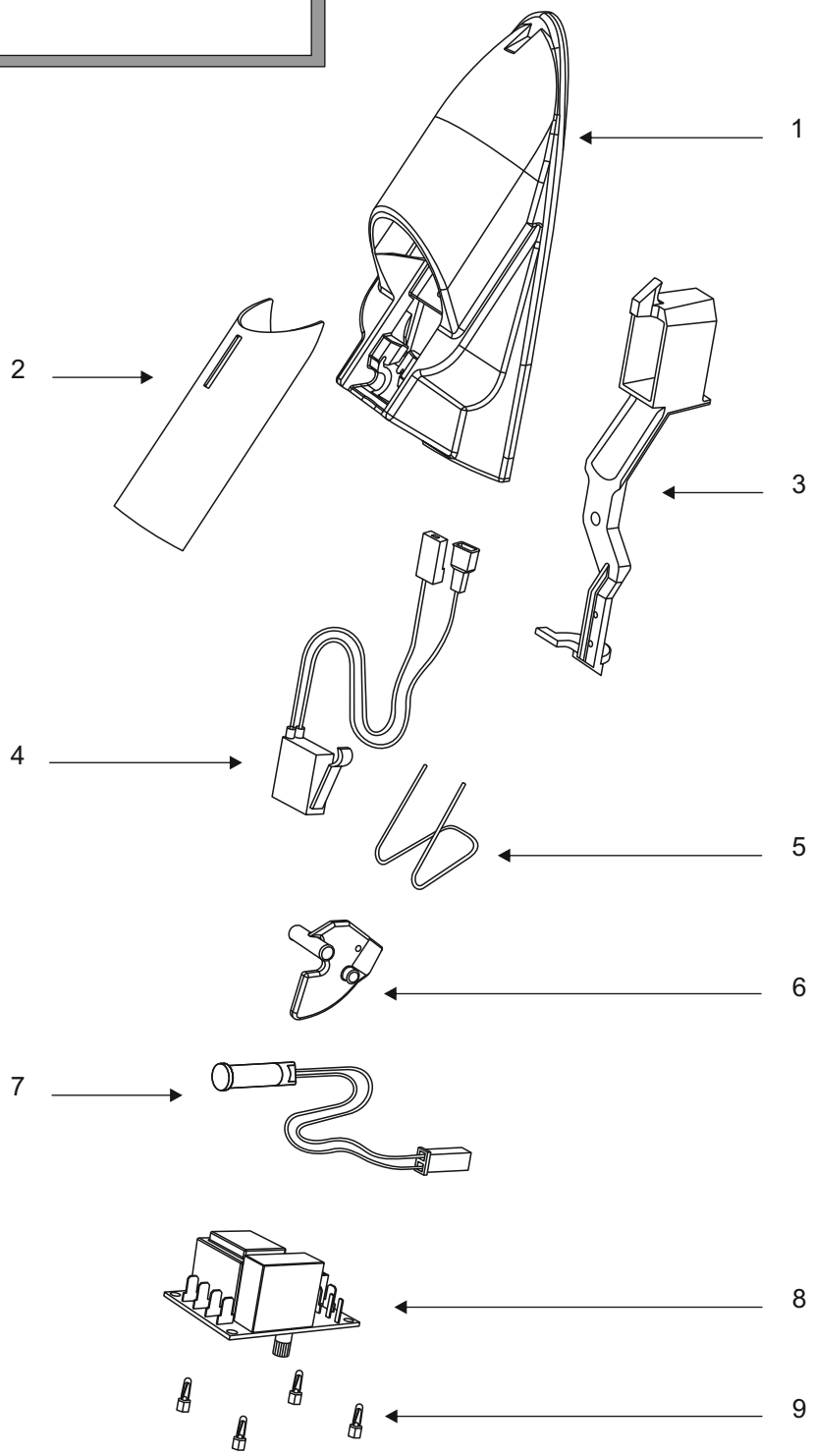

	N.	Code	Features
	1	C247017D	
	2	C244020	
	3	C242019	
	4	C246052F	
	5	C248021	
	6	C247018	
	7	C246059	
	8	C246043	230V-50/60Hz
		C2460431	110V-60Hz
	9	C247053	
	10	C247022	

Descriptions	
	Available
	Not available

MACAP srl
Via Toniolo 18 - 30030 - Maerne - (VE) - Italy - Tel. +39 041 5030466 Fax +39 041 5030477
www.macap.it - www.dynamometrictamper.com - info@macap.it